optimize!
softing

Quick Startup Guide

FG-200 HSE/FF Modbus

dataFLOW®

Version: EN-102018-1.31

Disclaimer of liability

The information contained in these instructions corresponds to the technical status at the time of printing of it and is passed on with the best of our knowledge. The information in these instructions is in no event a basis for warranty claims or contractual agreements concerning the described products, and may especially not be deemed as warranty concerning the quality and durability pursuant to Sec. 443 German Civil Code. We reserve the right to make any alterations or improvements to these instructions without prior notice. The actual design of products may deviate from the information contained in the instructions if technical alterations and product improvements so require.

Softing Industrial Automation GmbH

Richard-Reitzner-Allee 6
85540 Haar / Germany
http://industrial.softing.com

+ 49 89 4 56 56-0
+ 49 89 4 56 56-488
info.automation@softing.com
support.automation@softing.com

Scan the QR code to find the latest documentation on the product web page under Downloads.

Table of Contents

This page is intentionally left blank.

1 About this guide

1.1 Read me first

Please read this guide carefully before using the device to ensure safe and proper use. Softing does not assume any liability for damages due to improper installation or operation of this product.

1.2 Target audience

This Quick Startup Guide is intended for experienced operation personnel and network specialists responsible for configuring and maintaining field devices in process automation networks. Any person using an FG-200 HSE/FF Modbus must have read and fully understood the safety requirements and working instructions in this guide.

1.3 Typographic conventions

The following conventions are used throughout Softing customer documentation:

Keys, buttons, menu items, commands and other elements involving user interaction are set in bold font and menu sequences are separated by an arrow	Open **Start → Control Panel → Programs**
Buttons from the user interface are enclosed in brackets and set to bold typeface	Press **[Start]** to start the application
Coding samples, file extracts and screen output is set in Courier font type	`MaxDlsapAddressSupported=23`
File names and directories are written in italic	Device description files are located in *C:\<Application name>\delivery\software\Device Description files*

CAUTION

This symbol indicates a potentially hazardous situation which, if not avoided, may result in minor or moderate injury

Note

This symbol is used to call attention to notable information that should be followed during installation, use, or servicing of this device.

1.4 Document feedback

We would like to encourage you to provide feedback and comments to help us improve the documentation. If you have a PDF copy of this document simply write your comments and suggestions to the PDF file using the editing tool in Adobe Reader and email your feedback to support.automation@softing.com.

If you prefer to write your feedback directly as an email, please include the following information with your comments:

- document name
- document version (as shown on cover page)
- page number

2 About FG-200 HSE/FF Modbus

The Softing FG-200 HSE/FF Modbus is a gateway connecting Modbus RTU, Modbus TCP or FOUNDATION fieldbus High Speed Ethernet (HSE) to FOUNDATION fieldbus H1 field devices. It provides fast access to process data, while making use of FOUNDATION Fieldbus advantages such as reduced cabling, central field device parametrization, comprehensive diagnostics or intrinsically safe device segments. For simple installation it is compatible with the R. STAHL bus-Carrier Series 9419 and Fieldbus power supplies Series 9412.

2.1 Intended use

The FG-200 can be used for integrating up to four FF H1 links into a Modbus control system (TCP or RTU) or for communication between FF H1 devices and FF HSE network. The gateway can be operated in both hazardous and non-hazardous areas. Any other use is not intended. Follow the instructions in this guide on how to use the FG-200.

2.2 Scope of delivery

The delivery of this gateway includes the following parts:

- FG-200 HSE/FF Modbus device
- CD including ComConf, PACTware firmware and manuals
- Quick Startup Guide
- IP address label

Note

The FG-200 is available in two variants. They have identical technical specifications. Their only differentiating characteristic is their mount direction that is mirrored, i.e. rotated by 180°.

2.3 System requirements

- 24V power supply
- power conditioner
- PC with operating system Windows 7 or Windows 8.1 (both 32 bit or 64 bit supported)
- Web browser (Microsoft Internet Explorer version 8.0 or higher, Mozilla Firefox version version 35 or higher)

2.4 Safety precautions

Use in hazardous areas

The FG-200 is an electrical equipment with degree of protection Ex nA, approved for use in Zone 2 hazardous areas or in the safe area. The four FF-H1 interfaces are designed according to the protection method Ex ic. Only certified circuits with an according protection method shall be connected to these FF-H1 interfaces.

Special hints for safe use

- Before setting the FG-200 into operation, the corresponding field has to be maked (e.g. if the device is used in an IC environment, mark the upper field on the type label).

  IECEx BVS 15.0055 X
  Ex nA [ic] IIC T4 Gc ☐
  Ex nA IIC T4 Gc ☐

- Use an appropriate permanent pen for signing, e.g. an etching pen.
- More than one marking is not allowed. If you need a second marking, you must replace the existing equipment with a new one.
- An equipment which has been operated under non-intrinsically safe conditions is no longer permitted to be used under intrinsically safe conditions.

The FG-200 HSE/FF Modbus is only approved for intended and appropriate use. In case of noncompliance, the warranty and manufacturer’s liability do no longer apply!

CAUTION

During operation, the device's surface will be heated up. Avoid direct contact. When servicing, turn off the power supply and wait until surface has cooled down.

Note

Do not open the housing of the FG-200. It does not contain any parts that need to be maintained or repaired. In the event of a fault or defect, remove the device and return it to the vendor. Opening the device will void the warranty!

3 Installation

3.1 Hardware installation

Note

With an ambient temperature above 55 °C at the place of installation it is likely that the temperatures of connecting cables will increase if the cables are installed in an unfavourable position. In such cases, measure the temperature to ensure that the service temperature of the cables is not exceeded (i.e. 80 °C), or use cables sustaining high temperatures of at least 90 °C.

3.1.1 Mounting and dismounting

Note

Make sure the FG-200 is mounted in a manner that the power supply disconnecting device or interrupt facility can always be reached easily.

Note

Depending on the installation position, the maximum ambient operating temperature may differ. Refer to Technical Data 33 for detailed information.

Installation and inspection

Installation and inspection must be carried out by qualified personnel only (personnel qualified according to the German standard TRBS 1203 or similar (Technical Regulations for Operational Safety). The definition of terms can be found in IEC 60079-17.

Mounting

1. Hook the upper notch of the cut-out on the back of the FG-200 into a 35 mm DIN rail.

2. Press the FG-200 down towards the rail until it slides into place over the lip of the locking bar.

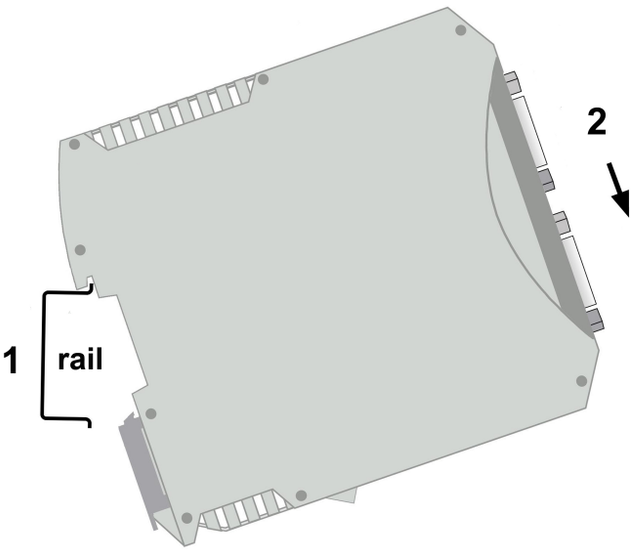

Note
Do not put stress on the device by bending or torsion.

Dismounting

1. Slide a screwdriver diagonally under the housing into the locking bar.

2. Lever the screwdriver upwards, pull the locking bar downwards - without tilting the screwdriver - and move the gateway upwards off the rail.

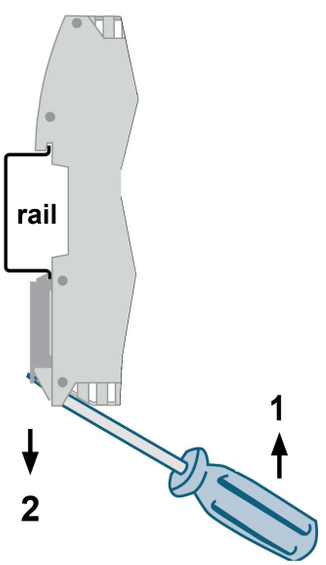

3.1.2 Connection diagram

The following connection diagram shows the physical interfaces of the FG-200.

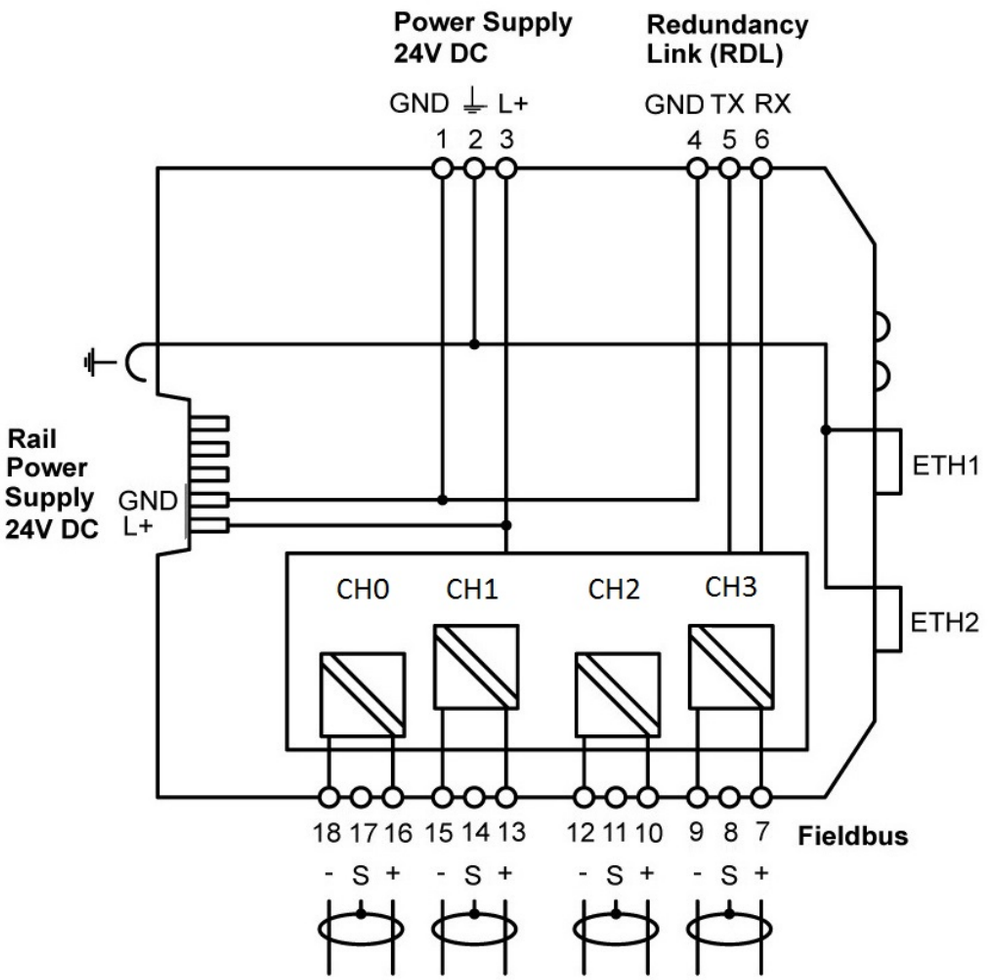

3.1.3 Connecting the power supply

1. Connect the FG-200 to a 24 V DC power supply.
2. Use different or redundant power supplies for redundant FG-200s.
3. Turn on the power supply. The boot process takes approx. 50 seconds. For indication of proper operation of a FG-200 acting in non-redundant mode or as primary device in redundant mode refer to Status indicators - LEDs 26.

The supply voltage (18 VDC .... 32 VDC) is connected by a 3-pole terminal block. The power supply is connected to the plug connector via flexible wires with a cross section of 0.75 to 1.5 mm². The ground connection wire must have a cross section of 1.5 mm².

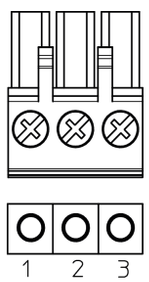

Pin	Signal	Description
1	GND	Ground
2	⏚	Functional earth
3	L+	Positive supply voltage

CAUTION

The Functional Earth (FE) connection of the device has to be connected at low inductance with the Protective Earth (PE) of the system.

Note

As indicated in the connection diagram, the power can be applied alternatively by a special DIN rail connector (Rail Power Supply). For further information contact Softing Industrial Automation.

3.1.4 Connecting to the network

1. Connect the FG-200 to the Modbus TCP network to one of the two Ethernet ports (ETH1 or ETH2).
2. Connect each link of your FOUNDATION fieldbus H1 network via a power conditioner to a Fieldbus Channel port of your gateway (CH0 to CH3).

Note

When using the FG-200 as linking device you can broadcast High Speed Ethernet (HSE) and Modbus TCP over the same Ethernet port.

FG-200 with redundancy connection

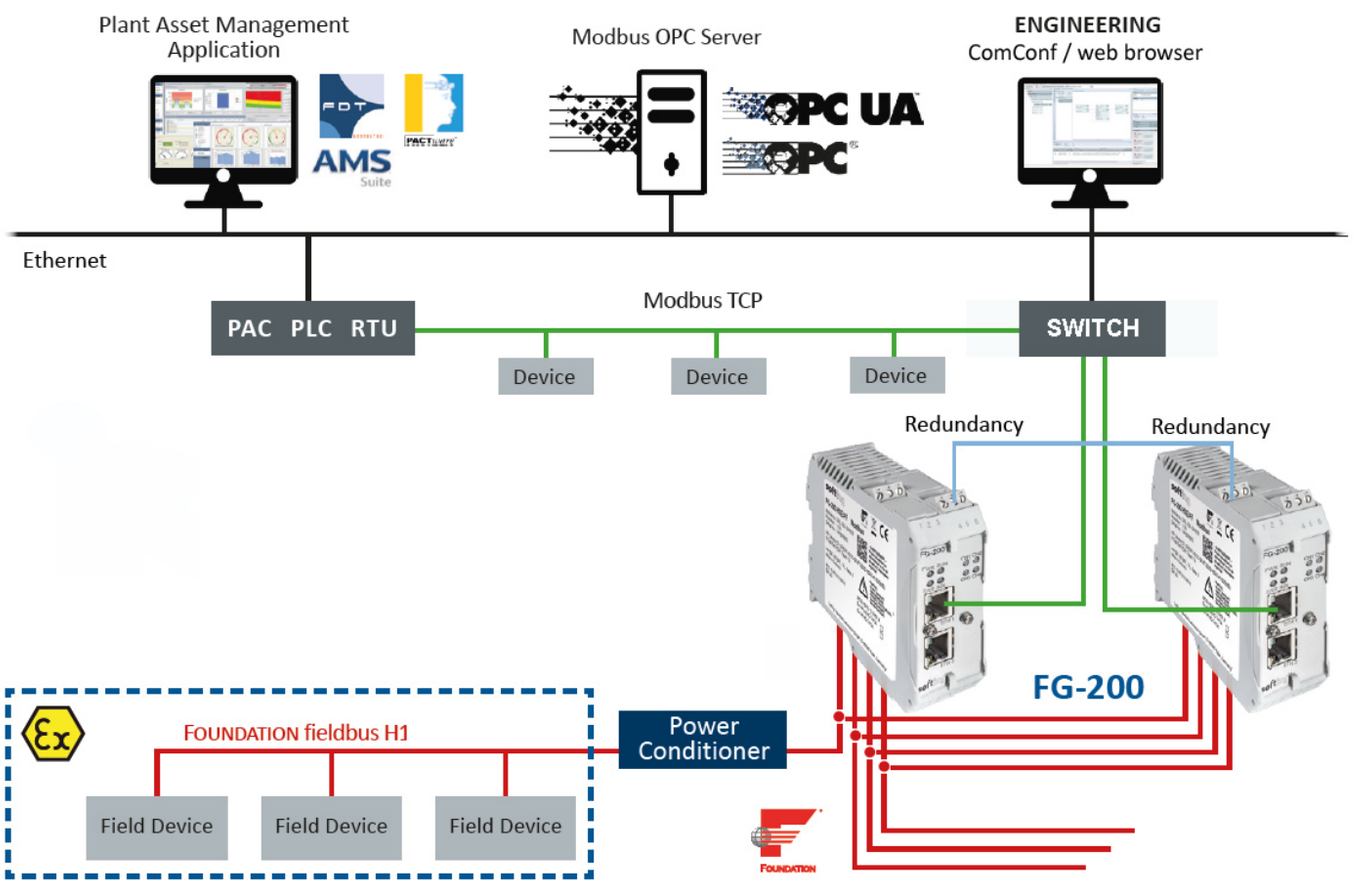

FG-200 with Modbus connection

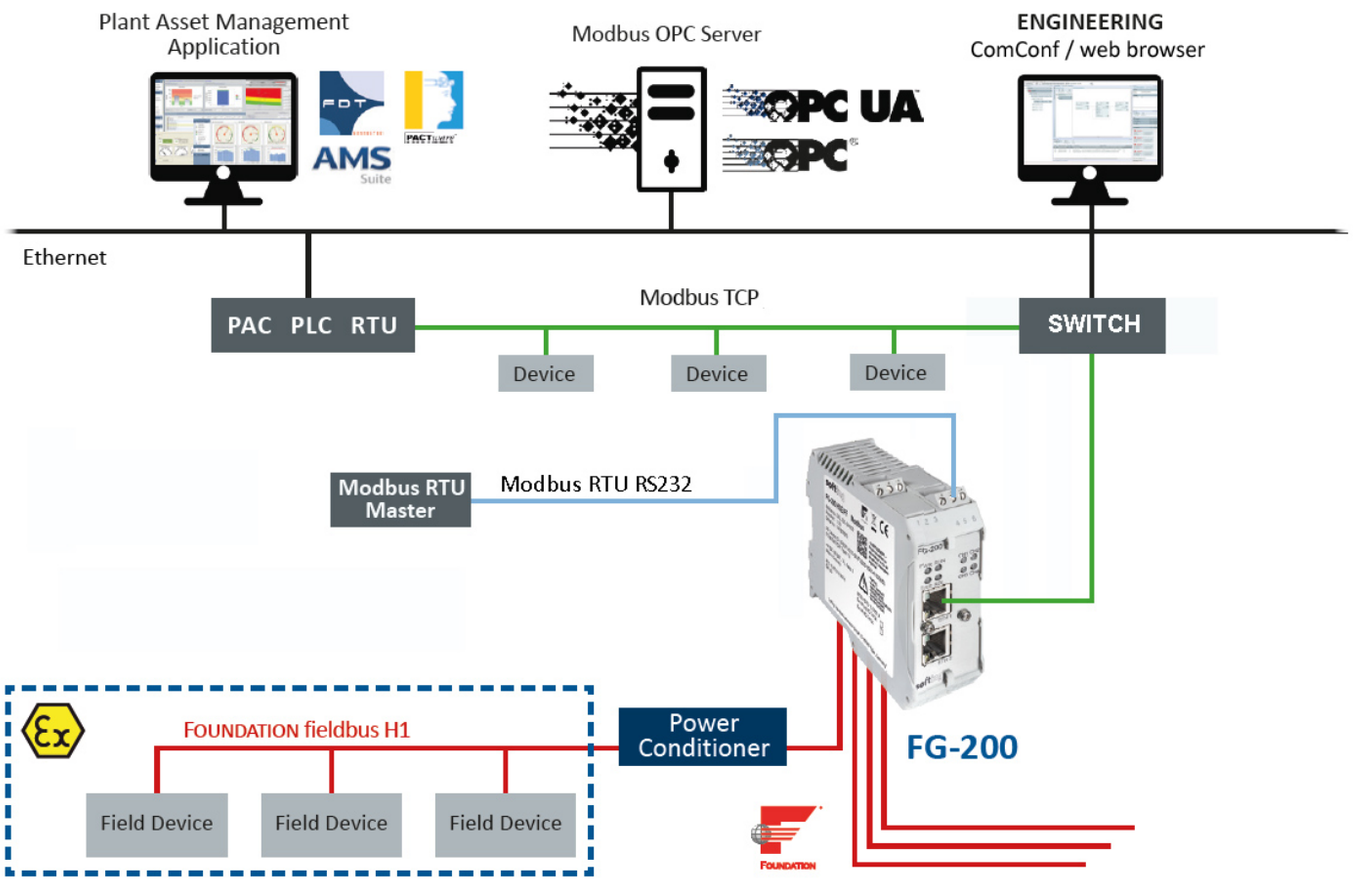

Note

Your FG-200 cannot operate in both Modbus TCP and Modbus RTU mode at the same time.

Note

When you connect your FG-200 to a Modbus RTU Master you cannot operate the device in redundancy mode.

3.1.5 Modbus serial connection

When connecting the FG-200 via serial connection (RTU) use the connector from your delivery with the following pin assignment:

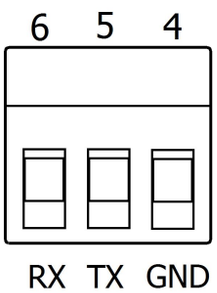

Pin	Signal	Description
6	RX	**R**eceiver e**X**change
5	TX	**T**ransmitter e**X**change
4	GND	Ground

Note

If you are working with two FG-200 in redundant mode, the serial connection cannot be used (see next Section).

3.1.6 FG-200 redundancy

If you intend to use two FG-200s as a redundant set, connect the redundancy link interfaces (RDL) of both FG-200s (primary and secondary) by a cable before you power up the devices. If the redundancy link is not installed before start-up, the FG-200 will operate in non-redundant mode.

Note

As the interface is not galvanically isolated make sure that there is no potential difference between the two connected devices.

The maximum cable length is 0.5 m according to EMC requirements. The pin assignment is:

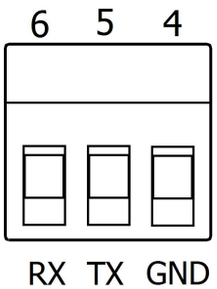

Pin	Signal	Description
6	RX	Receives data from redundant device
5	TX	Transmits data to redundant device
4	GND	Ground

Note

The receive (RX) and transmit (TX) signals must be cross-linked.

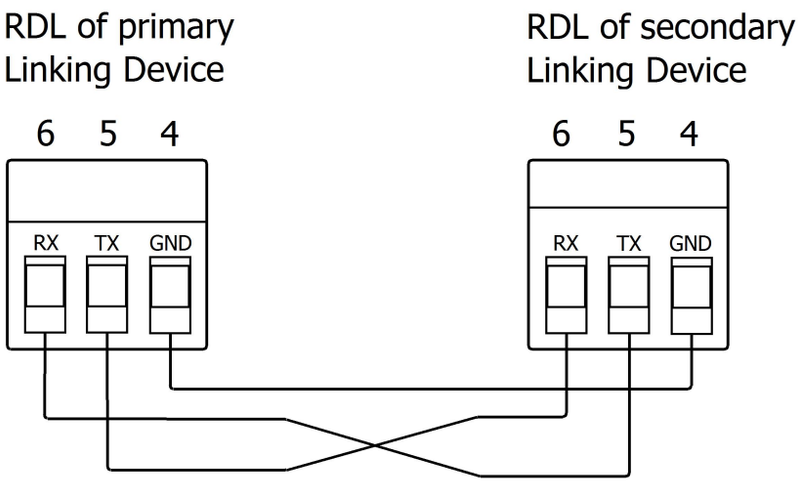

Do not power up devices when serial link is missing

If the two FG-200 s forming a redundant set are powered while the serial link is missing, both devices will behave like independent, non-redundant Primary Devices. If they operated in redundant mode before and therefore have identical configuration information, both will use the same H1 node addresses, which will cause problems on the H1 links. The ERR (error) LED will blink. In this case, remove the power, install the serial link and apply the power again.

Primary device vs. secondary device

When using a redundant set of two FG-200 s, the device which is powered first will operate as primary device. If both devices are powered at the same time, the one with the lower IP address will operate as primary device.

Removing the power supply

Before you remove the power supply from the primary device make sure the secondary device is operational. In a redundant set of FG-200s, removing the power supply, the Ethernet cable or the redundancy link interface cable from the primary device causes a redundancy change-over. Before doing so, make sure that the secondary device is operational (and not still booting due to a prior change-over). Otherwise the system breaks down or the configuration information might get lost. Therefore wait at least one minute between such checks.

3.1.7 FF-H1 interface connection

Connect the H1 links to the terminal blocks of the H1 interfaces. Since the FG-200 does not provide power to the H1 links, a power conditioner and a bus termination is required for each H1 link. When using a redundant set of two devices, make sure to connect each H1 link to the same channel (CH 1 .. CH 4) on both FG-200s.

The FG-200 provides four Foundation Fieldbus H1 interfaces. These interfaces are named CH1 to CH4 and are used to connect an FF-H1 bus to the FG-200.

FF H1 bus line channel 1

CH1

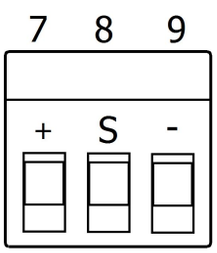

Pin	Signal	Description
7	+	Fieldbus +
8	S	Fieldbus shield
9	-	Fieldbus -

FF H1 bus line channel 2

CH2

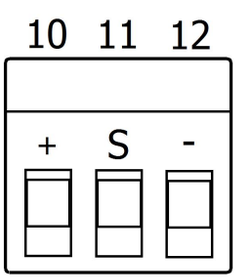

Pin	Signal	Description
10	+	Fieldbus +
11	S	Fieldbus shield
12	-	Fieldbus -

FF H1 bus line channel 3

CH3

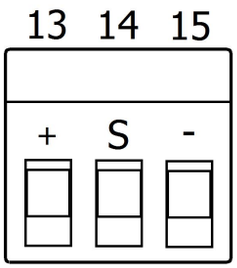

Pin	Signal	Description
13	+	Fieldbus +
14	S	Fieldbus shield
15	-	Fieldbus -

FF H1 bus line channel 4

CH4

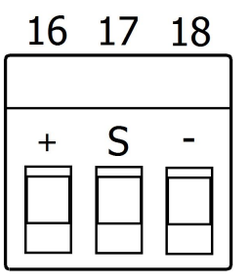

Pin	Signal	Description
16	+	Fieldbus +
17	S	Fieldbus shield
18	-	Fieldbus -

Note

The fieldbus shield is not connected directly to functional earth. For EMC reasons, it is only connected via a capacitor. If a direct connection to functional earth or protective earth is required, you need to implement this separately.

3.1.8 Powering up the device

Turn on the power supply. The boot process takes a few seconds. For indication of proper operation of a FG-200 refer to Status indicators - LEDs 26.

3.1.9 Adding a second FG-200 for redundancy

For adding a second FG-200 to an already commissioned FG-200 that is operating in the role "Primary, no backup", the following steps are required:

1. Set the IP configuration (IP address and subnet mask) of the second FG-200 using the same IP subnet as the primary device (see Configuring the IP address 24).
2. Connect the H1 links to the terminal blocks of the H1 interfaces. Make sure to connect each H1 link to the same channel (CH 1 .. CH 4) on both FG-200s.
3. Connect the second FG-200 to the Ethernet switch or hub.
4. Connect both RDL interfaces as mentioned in Section FG-200 redundancy. 17
5. Connect the second FG-200 to a 24 V DC power supply. Use different or redundant power supplies for redundant FG-200s.
6. After turning on the power supply the boot process takes approx. 50 seconds.
7. The second FG-200 will take over the configuration data from the primary device and will start operation in the role "secondary". For more details about proper operation as a secondary device see also the Status indicators - LEDs 26.

Hint
Refer to Section FG-200 redundancy 17 for more information on the redundancy concept.

3.2 Software installation

When you install a Softing product for the first time, you will be asked in a dialogue window if you trust the publisher. Activate the option **Always trust software from Softing AG** if you do not want to be asked in subsequent installations and select **[Install]** to start the installation.

1. Insert the CD *"Gateways for Process Industries"* into the CD drive.
   a. If Autorun is enabled on your system, the startup page is opened.
   b. If Autorun is disabled, open an Explorer window, select your CD drive and double-click the file *start.exe* in the CD's root directory.
2. Select *Installation of FG-200 Software and Documentation* in the startup page.
3. Select the installation setup files required.
4. Install the *SearchAnd Configure* software.
   With the *SearchAndConfigure* function you will be able to detect and modify device IP addresses. See the User Guide for more details.
5. Install PACTware if no other FDT frame application is used.
   PACTware and the Softing FFdtm will be installed.
6. Install FFdtm if you prefer using a different FDT frame application such as FieldCare, FieldMate or others to allow using a CommDTM in another FDT frame application. See the User Guide for more details.

4 Configuration

When your PC and FG-200 have an IP connection, start a web browser to access the gateway from your PC.

4.1 Configuring the IP address

The FG-200 is delivered with the pre-configured IP address 192.168.0.10.

Note

Before connecting the FG-200 to your LAN network, make sure that its IP address is not used by another network station.
To assign a new IP address to your PC, you must have administrator rights.

1. Open a browser (e.g. Internet Explorer or Firefox).
2. Enter the URL address 192.168.0.10 and press **Enter**.
3. Login with the following data:
   login name: **administrator**
   login password: **fgadmin**
4. Select **Configuration → Settings → Internet Protocol**.
5. Change **IP Address** and **Subnet Mask**.
6. Click **[Change Settings and Reebot]**
7. The FG-200 performs a reboot.

4.2 Setting up a ComConf project

For information on how to set up a project in the Communication Configuration Tool and working with the FG-200 web server interface refer to the User Guide on CD or download the lastest document version from the product page. Scan QR code on back page for direct access.

5 Status indicators - LEDs

The FG-200 is equipped with eight LEDs on its front side:

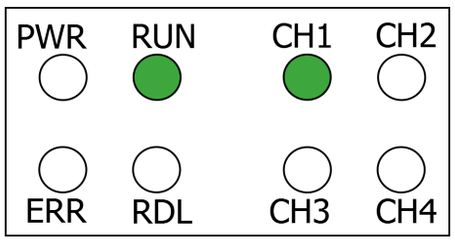

PWR stands for power supply

RUN stands for running

ERR stands for error

RDL stands for redundancy link

CH1 to **CH4** stands for H1 channel 1 to H1 channel 4

The LEDs may be on permanently or flash in different colors and frequencies. We use the following symbols:

Symbol	Color	Lighting
	none	off
	red	permanent
	green	permanent
	red	flashing
	green	flashing
	green	flashing slowly (0.5 Hz)
	green	flashing quickly (5 Hz)

5.1 PWR - power supply

●	permanent green	24V DC power supply is ok
⊗	off	no power supply

5.2 Device LED statuses in stand-alone mode

The following table shows possible LED combinations in stand-alone mode:

LEDs				Meaning
PWR		**RUN**		**Startup phase (approximately 7 seconds)** During this phase redundancy role is determined.
●	green	⊗		
⊗		⊗		
ERR		**RDL**		
PWR		**RUN**		**Non redundant device, ready.** The device is operational; it is not part of a redundant set.
●	green	●	green	
⊗		⊗		
ERR		**RDL**		
PWR		**RUN**		**Permanent hardware fault detection during startup.** A fatal error has been detected.
●	green	●	green	
●	red	⊗		
ERR		**RDL**		

5.3 RUN/ERR/RDL - LED statuses in redundant mode

The redundancy link LED is used to indicate if traffic via the serial line is performed. It will flash green if a valid message is received. It will switch to red if serial communication is lost and it will be off if no serial response has been received after startup.

	flashing green	redundancy link communication is ok (triggered by redundancy link packets)
	red	link communication interrupted or aborted (broken down)
	off	no link communication at all

LEDs	Meaning
PWR green **ERR** **RUN** **RDL**	Start–up phase (approx. 7 seconds) During this phase redundancy role is determined.
PWR green **ERR** **RUN** green **RDL**	Non redundant device, ready. The device is operational; it is not part of a redundant set. Primary Device is redundant set. The device is operational, acting as Primary Device in a redundant set. The secondary device is ready
PWR green red **ERR** **RUN** green **RDL**	Permanent hardware fault detection during startup. A fatal error has been detected. Possible failure could be a missing Ethernet connection.

LEDs	Meaning
PWR green / red **ERR** **RUN** green **RDL**	Primary device or non-redundant device, hardware failure. The device is acting as non-redundant device, but a minor hardware failure has been detected during start-up. In the case of a Primary Device on a redundant set, the secondary device is not ready
PWR green / red **ERR** **RUN** green **RDL**	Primary device or non-redundant device, failure. The device is acting as non-redundant device, but a failure has been detected. **or** Secondary device, not ready. The device is acting as secondary device in a redundant set, but it is not ready to take over the primary role due to e.g. not synchronized configuration information or a non-operational redundancy link. **or** Primary Device or non-redundant device, failure. The device is acting as Primary Device in a redundant set or as non-redundant device, but a failure has been detected. In the case of a Primary Device in a redundant set or as non redundant set, the secondary device is not ready.

LEDs	Meaning
PWR green **ERR** **RUN** green **RDL** green	Secondary device, operational. The device is operational as secondary device in a redundant set. The configuration information has been successfully transferred from the Primary Device and the redundancy link is operational.
PWR green **ERR** red **RUN** **RDL**	Secondary device, hardware failure. The device is acting as secondary device in a redundant set, but a hardware failure has been detected.
PWR green **ERR** red **RUN** green **RDL**	Primary with H1 error state
PWR green **ERR** red **RUN** green **RDL**	Primary not ready
PWR green **ERR** red **RUN** green **RDL**	Secondary with H1 error

LEDs	Meaning
PWR **RUN** green red **ERR** **RDL**	Primary, configuration error

5.4 H1 channel status indicators

The following table shows the channel LEDs and their meaning of all four channels (CH1 - CH4):

Symbol	Color / frequency	Meaning
	green	Visitor address
	flashing slowly (0.5 Hz)	not in LAS role
	flashing quickly (5 Hz)	LAS role
	red	no carrier or H1 link is disconnected
	flashing red	no token received
	off	H1 link unused

6 Technical data

6.1 Specifications

Power supply	18 VDC…32 VDC; SELV/PELV supply mandatory Typical input current is 200 mA; maximum is 1 A (considering the rush-in current at switch-on).
FF-H1	Four FF-H1 channels, compliant with type 114 of the FF physical layer profile. The Fieldbus voltage range is from 9 VDC…32 VDC. Preferred value is 24 VDC.
Ethernet	IEEE 802.3 100BASE-TX/10BASE-T Only ETH 1 is supported. Do not use ETH 2 (reserved for further use).
Minimum ambient operating temperature	-40 °C
Storage temperature	-40 °C…+85 °C
Relative humidity	10 %…95 % (non-condensing)
Altitude	Must not exceed 2,000 m
Location	Indoor use only; no direct sunlight
Coating	Conformal Coating based on ANSI/ISA-S71.04 G3
Safety standard	IEC/EN/UL 61010-1 Safety requirements for electrical equipment for measurement, control and laboratory use - Part 1: General requirements: IEC/EN/UL 61010-2-201 Safety requirements for electrical equipment for measurement, control and laboratory use - Part 2-201: Particular requirements for control equipment (both with CB scheme).
Ingress protection	IP20

6.2 Installation positions

The gateway FG-200 can be mounted horizontally and vertically. Depending on the installation position, different ambient operating temperatures (T_a) are allowed:

Minimum distance

Provide a minimum distance of 50 mm to the air inlet and air outlet to ensure natural convection.

Rotated installation position

The maximum permissible ambient temperature values also apply to a 180° rotated installation position.

Horizontal installation position

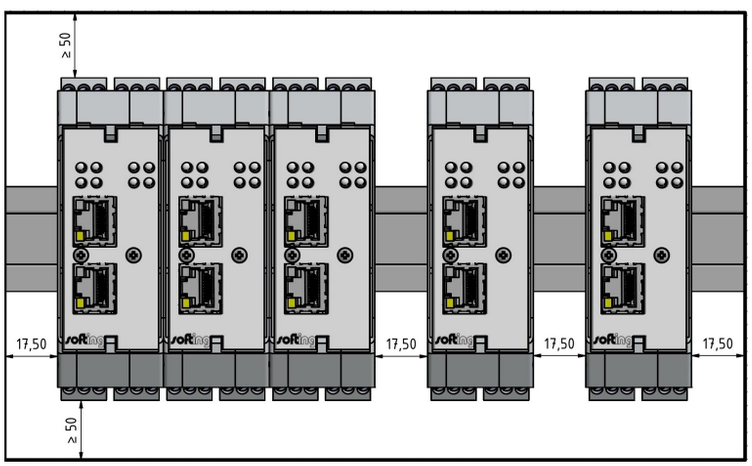

Maximum number of fieldbus channels	Maximum fieldbus voltage	Minimum distance	Maximum permissible ambient temperature T_a
4	32 VDC	0 mm	55 °C
2	24 VDC	0 mm	60 °C
4	32 VDC	17.5 mm	65 °C
2	24 VDC	17.5 mm	70 °C

Vertical installation position

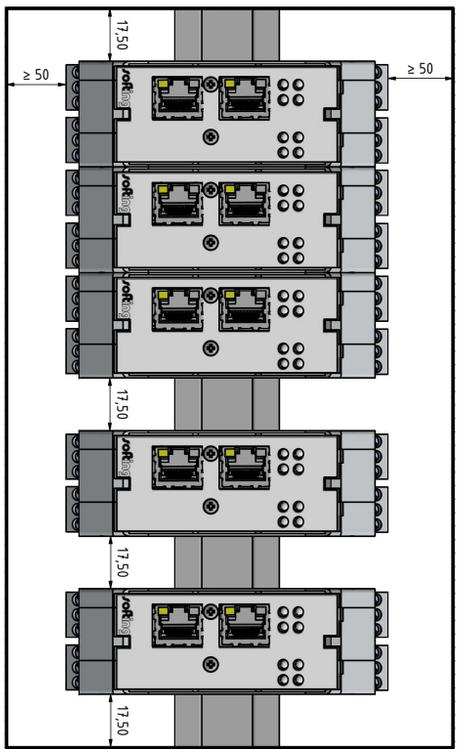

Maximum number of fieldbus channels	Maximum fieldbus voltage	Minimum distance	Maximum permissible ambient temperature T_a
4	32 VDC	0 mm	40 °C
2	24 VDC	0 mm	50 °C
4	32 VDC	17.5 mm	55 °C
2	24 VDC	17.5 mm	60 °C

7 European and International Approval

The equipment meets the following standards:

a) IEC 60079-0:2011 Ed. 6, modified Cor. 2012 + Cor. 2013 / EN 60079-0:2012 + A11:2013

b) IEC 60079-11:2011 Ed. 6 + Corr. 2012 / EN 60079-11:2012

c) IEC 60079-15:2010 Ed. 4 / EN 60079-15:2010

If indicated on the device label and in the related documentation, the FG-200 is suitable for use in gas-Ex atmospheres of Zone 2 in the explosion groups IIA, IIB and IIC in temperature class T4, if accommodated in a tested enclosure.

- IECEx marking for explosion protection: Ex nA [ic] IIC T4 Gc.
- ATEX marking for explosion protection: Ex II 3G nA [ic] IIC T4 Gc.

The Ex protection method [ic] corresponds only to the FF-H1 fieldbus interfaces.

The FG-200 HSE/FF Modbus complies with the applicable standards and regulations and meets the requirements of European Directive 94/9/EC. The requirements for erecting the device as part of the system in potentially explosive atmospheres (e.g. IEC / EN 60079-14) must be strictly adhered.

Certificates

ATEX The EC type examination number for ATEX is: **BVS 15 ATEX E 063 X**
A copy of the certificate is available in section ATEX Type Examination Certificate.

IECEx The type examination number for IECEx is: **IECEx BVS 15.0055X**
The certificate can be downloaded from http://iecex.iec.ch

8 North American Approval

If indicated on the device label, the FG-200 is suitable for use in Class 1, Division 2, Groups A, B, C and D hazardous or non-hazardous locations.

The device must be installed in a protective enclosure which meets the requirements for resistance to impact and IP54 according to IEC 60529.

Marking for explosion protection: Class I Div.2 Groups A,B,C,D.

Certificate

cULus The cULus listed Certificate of Compliance number is: **20151215-E356500**
See the user manual for a copy of the Certificate of Compliance.

9 Declaration of conformity

This device is compliant with EC directive 2014/30/EG for "Electromagnetic Compatibility" (EMC) and meets the following harmonized standards:

- EN 55011 Industrial, scientific and medical (ISM) devices - radio disturbance - limits and methods of measurement
- EN 55032 Electromagnetic compatibility of multimedia equipment (MME) and interference emission
- EN 61000-6-4 Electromagnetic compatibility (EMC); Part 6-4: generic standard – emission for industrial environments
- EN 61000-6-2 Electromagnetic compatibility (EMC); Part 6-2: generic standard - immunity for industrial environments

Note
To fulfill the EMC requirements, the other components of your installation (DC adapter, Industrial Ethernet devices, etc.) also have to meet the EMC requirements. A shielded cable must be used. In addition, the cable shield must be grounded properly.

CAUTION
This is a Class A product. In a domestic environment this product may cause radio interference in which case the user may be required to take adequate measures!

CE
A Declaration of Conformity in compliance with the above standards has been made and can be requested from Softing Industrial Automation.

ROHS

This product is ROHS compliant.

FCC

This equipment has been tested and found to comply with the limits for a Class A digital device, under part 15 of the FCC Rules. These limits are designed to provide reasonable protection against harmful interference when the equipment is operated in a commercial environment. This equipment generates, uses, and can radiate radio frequency energy and, if not installed and used in accordance with the instruction manual, may cause harmful interference to radio communications.

VCCI

This Class A product conforms to the regulations of Voluntary Control Council for Interference (VCCI) by Information Technology Equipment.

WEEE

Electrical and electronic equipment must be disposed of separately from normal waste at the end of its operational lifetime. Packaging material and worn components shall be disposed of according to the regulations applicable in the country of installation.

Softing Industrial Automation GmbH

Richard-Reitzner-Allee 6
85540 Haar / Germany
http://industrial.softing.com

+ 49 89 45 656-340
+ 49 89 45 656-488
info.idn@softing.com